MATH 152
Mrs. Bonny Tighe

EXAM IA
6.1-7.5
50 points
PART ONE

Name Solutions

TA_____ Wed 10/3/18

1. (15 points) Use the Washer Method to find the volume of the solid of revolution for the region bounded by the curves $y = \cos(3x), x = 0,\ y = 0\ \ on\ \ 0 \le x \le \pi/6$ about the line y = 1

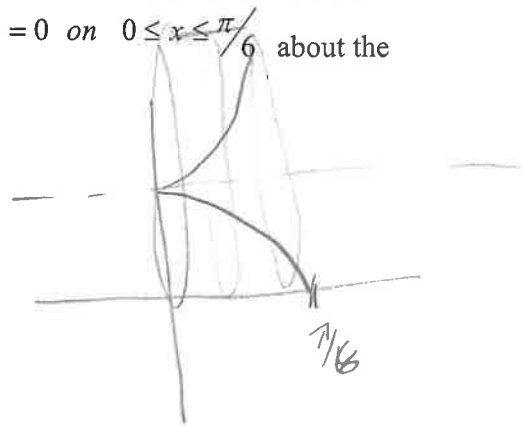

$$\pi \int_0^{\pi/6} 1^2 - (1-\cos 3x)^2\,dx$$

$$\pi \int 1 - 1 + 2\cos 3x - \cos^2 3x\,dx$$

$$\pi \int \left(2\cos 3x - \tfrac{1}{2} - \tfrac{1}{2}\cos 6x\right)dx$$

$$\pi \left[\tfrac{2}{3}\sin 3x - \tfrac{1}{2}x - \tfrac{1}{12}\sin 6x\right]_0^{\pi/6}$$

$$\pi \left[\left(\tfrac{2}{3}\sin \pi/2 - \tfrac{1}{2}\left(\tfrac{\pi}{6}\right) - \tfrac{1}{12}\sin \pi\right) - 0\right]$$

$$\pi \left[\tfrac{2}{3} - \tfrac{\pi}{12}\right]$$

2. (10 points) Find the average value of the function $y = \dfrac{x^2+1}{x^2-1}$ on the interval $\left[0, \dfrac{1}{2}\right]$

$$\frac{1}{1/2 - 0}\int_0^{1/2} 1 + \frac{2}{(x+1)(x-1)}\,dx$$

$$2\int_0^{1/2} \frac{-1}{x+1} + \frac{1}{x-1} + 1\,dx$$

$$2\left[x + \ln|x-1| - \ln|x+1|\right]_0^{1/2}$$

$$2\left[\left(\tfrac{1}{2} + \ln|-1/2| - \ln|3/2|\right) - \left(0 + \ln|-1|\right)\right]$$

$$1 + 2\ln|1/2| - 2\ln|3/2| \quad \text{or} \quad 1 + 2\ln 3$$

$$\begin{array}{r} 1 \\ x^2-1 \overline{\big) x^2+1} \\ -(x^2-1) \\ \hline 2 \end{array}$$

$$\frac{A}{x+1} + \frac{B}{x-1} = \frac{2}{(x+1)(x-1)}$$

$A(x-1) + B(x+1) = 2$

$x = 1 \qquad 2B = 2 \quad B = 1$

$x = -1 \qquad A = -1$

3. (15 points) Use the Cylindrical Shells Method to find the volume of the solid of revolution for the region bounded by the curves $y = 2\sqrt{x}$ *and* $y = 2x$ rotated about the line $y = 2$.

$\frac{y^2}{4} = \left(\frac{y}{2}\right)^2 = x \qquad \frac{y}{2} = x$

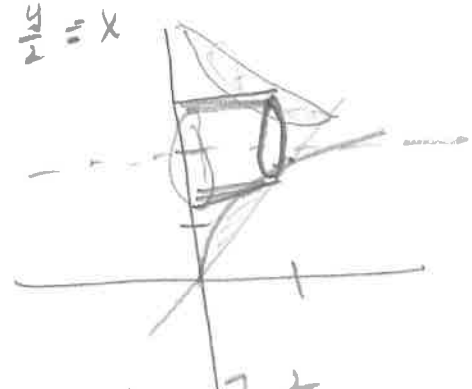

$$2\pi \int_0^2 (2-y)\left[\frac{y}{2} - \frac{y^2}{4}\right] dy$$

$$2\pi \int_0^2 y - \frac{y^2}{2} - \frac{y^2}{2} + \frac{y^3}{4}\, dy =$$

$$2\pi \int_0^2 \left(y - y^2 + \frac{y^3}{4}\right) dy = 2\pi \left[\frac{1}{2}y^2 - \frac{1}{3}y^3 + \frac{1}{16}y^4\right]_0^2$$

$$2\pi\left[2 - \frac{8}{3} + 1\right] = 2\pi\left[\frac{1}{3}\right] = 2\pi/3$$

4. (10 points) Find the area of the region bounded the curves $y = x^2$, *and* $y = x$ on the interval $0 \le x \le 2$

$$\int_0^1 (x - x^2)\, dx + \int_1^2 (x^2 - x)\, dx$$

$$\frac{1}{2}x^2 - \frac{1}{3}x^3\Big]_0^1 + \frac{1}{3}x^3 - \frac{1}{2}x^2\Big]_1^2$$

$$\frac{1}{2} - \frac{1}{3} + \left(\frac{8}{3} - 2\right) - \left(\frac{1}{3} - \frac{1}{2}\right)$$

$$\frac{8}{3} - 2 - \frac{1}{3} + \frac{1}{2}$$

$$1 - \frac{2}{3} + \frac{8}{3} - 2$$

$$1 - 2 - 2$$

1

5. (5 points) True or false

a) $\int \cot x \, dx = \ln|\sec x| + C$ False

b) $\dfrac{x^2+1}{x^2-4}$ can be put in the form $\dfrac{A}{x-2} + \dfrac{B}{x+2}$ False

c) The area between $y = (x-2)^2$ and y = 4, which intersect at x = 0, 4, would be set up as $\int_0^4 \left(4-(x-2)^2\right) dx$ True

d) The formula for the average value of a function is $f_{avg} = \dfrac{1}{a-b}\int_a^b f(x)\, dx$

False

e) $\int x \sec^2 x \, dx = \int \tan^{-1} x \, dx$ False

MATH 152
Mrs. Bonny Tighe

EXAM IA

6.1-7.5
50 points
PART ONE

Name Solutions

TA_____ Wed 10/3/18

1. (15 points) Use the Cylindrical Shells Method to find the volume of the solid of revolution for the region bounded by the curves $x = 5y - y^2$ *and* $y = x$ rotated about the ~~x-axis.~~ $y=4$

$5y - y^2 = y$
$4y - y^2 = 0$
$y = 0, 4$

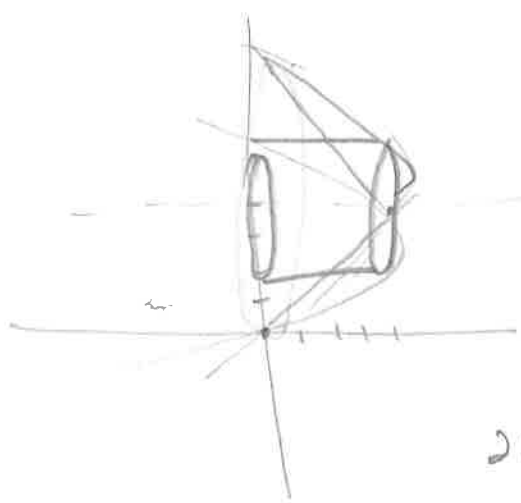

$$2\pi \int_0^4 (4-y)[5y - y^2 - y]\,dy$$
$$2\pi \int_0^4 (4-y)[4y - y^2]\,dy$$
$$2\pi \int_0^4 (16y - 4y^2 - 4y^2 + y^3)\,dy =$$
$$2\pi \int_0^4 (16y - 8y^2 + y^3)\,dy =$$
$$2\pi \left(8y^2 - \tfrac{8}{3}y^3 + \tfrac{1}{4}y^4\right)\Big]_0^4$$
$$2\pi\left[8(4^2) - \tfrac{8}{3}(4^3) + \tfrac{1}{4}(4^4) - 0\right] =$$
$$2\pi(64)\left[2 - 8/3 + 1\right] = 128\pi(1/3) = 128\pi/3$$

2. (10 points) Find the average value of the function $y = \dfrac{\cos x}{\sin^2 x + 1}$ on the interval ~~[0,1]~~ $[0, \pi/2]$

$$\frac{1}{\pi/2 - 0}\int_0^{\pi/2} \frac{\cos x}{\sin^2 x + 1}\,dx =$$

$m = \sin x$
$dm = \cos x\,dx$

$$\frac{2}{\pi}\int \frac{dm}{m^2+1} = \frac{2}{\pi}\tan^{-1} m\Big] = \frac{2}{\pi}\tan^{-1}(\sin x)\Big]_0^{\pi/2}$$

$$\frac{2}{\pi}\left[\tan^{-1}(\sin \pi/2) - \tan^{-1}(\sin 0)\right]$$
$$\frac{2}{\pi}\left[\tan^{-1}(1) - \tan^{-1}(0)\right] = \frac{2}{\pi}\left[\pi/4 - 0\right] = 1/2$$

3. (15 points) Use the Washer Method to find the volume of the solid of revolution for the region bounded by the curves $y=\sqrt{x}$, $y=x$ about the line x = -1

$y^2 = x \quad x = y$

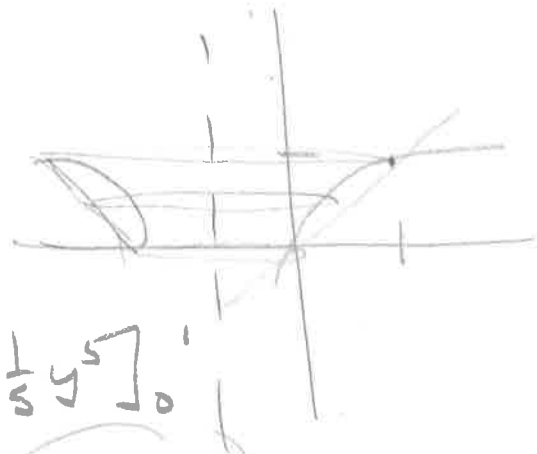

$\pi \int_0^1 (y+1)^2 - (y^2+1)^2 \, dy$

$\pi \int_0^1 y^2 + 2y + 1 - y^4 - 2y^2 - 1 \, dy$

$\pi \int_0^1 2y - y^2 - y^4 \, dy = \pi \left[y^2 - \frac{1}{3}y^3 - \frac{1}{5}y^5 \right]_0^1$

$\pi \left[1 - \frac{1}{3} - \frac{1}{5} \right] = \pi \left[\frac{15-5-3}{15} \right] = \pi \left(\frac{7}{15} \right)$

4. (10 points) Find the area of the region bounded the curves $y = \sin 2x$, *and* $y = \sin x$ on the interval $0 \le x \le \frac{\pi}{2}$

$2\sin x \cos x = \sin x$

$2\sin x \cos x - \sin x = 0$

$\sin x (2\cos x - 1) = 0$

$\sin x = 0 \quad \cos x = 1/2$

$x = \pi/3$

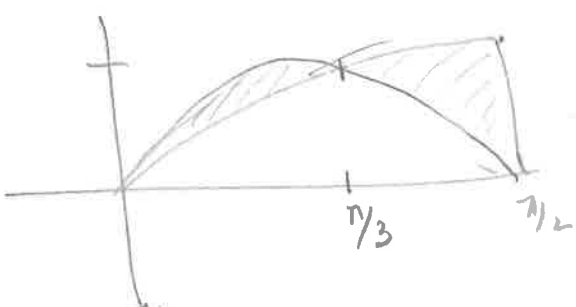

$\int_0^{\pi/3} (\sin 2x - \sin x) \, dx + \int_{\pi/3}^{\pi/2} (\sin x - \sin 2x) \, dx$

$-\frac{1}{2}\cos 2x + \cos x \Big]_0^{\pi/3} + -\cos x + \frac{1}{2}\cos 2x \Big]_{\pi/3}^{\pi/2}$

$\left(-\frac{1}{2}\cos\frac{2\pi}{3} + \cos\pi/3\right) - \left(-\frac{1}{2}\cos 0 + \cos 0\right) + \left(-\cos\pi/2 + \frac{1}{2}\cos\pi\right) - \left(-\cos\pi/3 + 1/2\cos 2\pi/3\right)$

$-\cos 2\pi/3 + 2\cos\pi/3 - \left(\frac{1}{2}\right) - 0 + 1/2(-1)$

$-(-1/2) + 2(1/2) = \frac{1}{2} - \frac{1}{2}$

$\frac{1}{2} + 1 - 1 = 1/2$

5. (5 points) True or false

a) $\cos^2 x + 1 = \sin^2 x + C$ False

b) $\dfrac{x^2+1}{x^2-4}$ can be put in the form $\dfrac{A}{x-2} + \dfrac{B}{x+2}$ False

c) $\displaystyle\int \frac{y^2}{\sqrt{4y^2+16}}\,dx$, we need to use the trig substitution $y = 2\tan\theta$. True

$2y = 4\tan\theta$

d) $\displaystyle\int_0^1 \frac{1}{x^2+1}\,dx$ should be evaluated using partial fraction decomposition. False

e) $\displaystyle\int \tan(x)\,dx = \ln|\sin x| + C$ False